Technical product and installation information

SANHA
a perfect fit



SANHA Installation Information

Technology · Products · Installation



Contents

		Page
1	General technology	5
	1.1 Storage and transport	5
	1.2 External corrosion protection	5
	1.3 Pipe insulation	6
	1.4 Seals, sealing agents and sealing aids	6
	1.5 Leak testing	6
	1.6 Flushing drinking water installations	6
	1.7 Disinfecting drinking water installations	6
	1.8 Electrical trace heating	7
	1.9 Electrical protection measures	7
	1.10 Internal corrosion in open systems	7
	1.11 Internal corrosion in closed systems	7
	1.12 External corrosion	8
2	Products	9
	2.1 Applications	9
	2.2 NiroSan® system fittings and NiroSan® stainless steel system pipes	9
	2.3 NiroTherm® system fittings and NiroTherm® stainless steel pipes	12
	2.4 SANHA®-Press | PURAPRESS® system fittings and copper pipes	13
	2.5 SANHA®-Therm system fittings and carbon steel pipes	16
	2.6 3fit®-Press and 3fit®-Push: system fittings for multi-layered composite pipes	17
	2.7 PURAFIT®: Silicon bronze threaded fittings	21
	2.8 Threaded malleable cast iron fittings +S+	22
	2.9 Pressure loss tables for metal and composite pipes	22
	2.10 Pressure loss coefficients (zeta values) for system fittings	22
	2.11 Linear thermal expansion of pipes	23
	2.12 Tool spacing	25
	2.13 Pipe support spacing	26
	2.14 Allowable bending radius	27
	2.15 Space requirements	28

Contents Page

3 Pipe joints 29

3.1 Recommended press tools 29

3.1.1 General requirements 29

3.1.2 SANHA press tools 30

3.2 Metallic pipe joints 30

3.2.1 Dimension d = 12 to 35 mm (press joints using press jaws) 31

3.2.2 Dimension d = 42 to 88.9 mm (press joints using press collars and adaptor jaws) 33

3.2.3 Dimension d = 108 mm (press joints using press collars and adaptor jaws) 35

3.3 Pipe joints using the 3fit®-Press system fittings 37

3.3.1 Dimensions up to 32 mm 37

3.3.2 Dimensions of 40 mm, 50 mm and 63 mm 38

3.4 Pipe joints using the 3fit®-Push push-fit fittings 40

4 Examples of testing protocols 42

1. General technology

The following instructions and information are provided purely as recommendations. The relevant standards, legal requirements and recognised engineering best practice must be observed by the installer at all times.

1.1 Storage and transport

Damage, soiling and, for stainless steel materials in particular, contact with iron and unalloyed steel must be prevented during storage and transport to protect against corrosion. For example, we recommend covering the cargo bed with plastic sheeting during transit in HGVs, if iron or unalloyed steel pipes or other components have been previously transported.

1.2 External corrosion protection

Due to the corrosion resistance of the SANHA system components (pipes and fittings) external corrosion protection is usually unnecessary, (please note the special instructions for insulating carbon steel). Depending on the surrounding atmosphere and/or the temperature of the medium, external, diffusion resistant insulation may be necessary to prevent external corrosion attack. Special attention must be paid if the atmosphere contains aggressive substances and condensation formation is possible on the pipe surface.

Special processing instructions for preventing corrosion when using our SANHA®-Therm carbon steel installation system.

Our SANHA®-Therm system pipes and fittings are produced from unalloyed E 195 (RSt 34-2) steel with material number 1.0034 to EN 10305-3, with a galvanised coat applied to the outer pipe surface compliant with DIN 50961 and a minimum thickness of 8 µm.

The following processes, which act on the system over an extended period, demand **additional protection by the installer**:

- moisture in the surrounding atmosphere and/or construction materials
- corrosive substances in the surrounding atmosphere and/or construction materials

In such cases an additional, watertight and non-porous corrosion protection coating compliant with AGI standard Q 151 must be applied.

In practice, closed-cell insulating materials or aluminium foil wrapped mineral fibre insulation has proved reliable.

Our recommendation:

If the installation is intended to go beneath a screed or in a humid atmosphere, then Carbon Steel systems can only be used if suitable measures are taken to prevent the action of moisture on the surface.

If prolonged action of moisture cannot be prevented with certainty, we recommend using our NiroTherm® stainless steel installation system. This system consists of particularly economical NiroTherm® stainless steel system pipes and system press fittings with material number 1.4301 / 304.

1.3 Pipe insulation

Pipe insulation, in particular the insulation thickness, depends on the respective application. The insulation thickness must be selected by the installer according to the application and relevant standards. The installation instructions of the insulation manufacturer must be followed.

1.4 Seals, sealing agents and sealing aids

Sealing agents and seals, such as flat gaskets, must not release chloride ions into the water or lead to local concentrations of chloride ions. This requirement can be met by using the Centellen flat gaskets used in SANHA components. We recommend using permanently elastic sealants for threaded connections. When using hemp, a chloride-free sealing aid should be used. The use of thread sealing tape such as Teflon/PTFE is not recommended.

1.5 Leak testing

A leak test compliant with EN 806 should be performed after completion and before commissioning an installation system. Because of the stringent hygiene regulations for drinking water installations and to prevent corrosion, we recommend leak testing using air. Test logs must be produced for leak tests. Relevant test logs for SANHA installation systems can be requested through the SANHA technical hotline at 01628 819245 or be downloaded from our homepage at **www.sanha.co.uk**.

1.6 Flushing drinking water installations

All drinking water pipes, regardless of the material used, must always be flushed using filtered drinking water. For hygiene reasons, the drinking water installation must commence its intended operations 72 hours after flushing, at the latest, in order to

- ensure drinking water quality (hygiene)
- clean the internal pipe surfaces
- avoid any malfunctions in the valves, fittings and water devices

These requirements are met by two flushing methods:

- air-water mixture flushing
- water flushing

1.7 Disinfecting drinking water installations

Additional disinfection of the pipe system is not required by EN 806 or national standards and regulations. If in exceptional cases pipe disinfection is necessary or required for specific reasons, then clarification should be sought from our technical department as to their suitability. Appropriate flushing logs can be downloaded from our web site at
www.sanha.co.uk/en/downloads/testing-protocols/

1.8 Electrical trace heating

Electrical trace heating can be used in SANHA installation systems if the inner pipe wall temperature does not permanently exceed 60 °C. Temperatures short-term in excess of 70 °C are allowed for the purpose of thermal disinfection. To avoid unacceptable pressure build-up when using electrical trace heating, isolated pipe regions with no safety devices installed should not be heated. EN 806 and EN 1711 must be observed at all times.

1.9 Electrical protection measures

All electro-conductive system components must be earthed. Metallic SANHA installation systems (NiroSan®, SANHA®-Press, SANHA®-Therm) form a continuous, conductive pipe joint and must be integrated into the earth circuit. The installer of the electrical system is responsible for the implementation of such electrical protective measures.

1.10 Internal corrosion in open systems

An open system is defined as one which allows air to mix with the circulating water.

Stainless Steel

When in contact with oxygen or oxygenated water, a general inert protective Chromium Oxide layer is formed on the surface of the stainless steel. This prevents any subsequent contamination of the water and makes the use of stainless steel safe for all drinking water installations. For this reason the NiroSan® system is ideal for any remedial works required for drinking water installations irrespective of the existing compliant material.

Due to the sensitisation of stainless steel through uncontrolled heating, hot bending of Stainless Steel pipes is not permissible. Care must also be taken if strong oxidisation/cleaning agents are used as these may affect the passive protective layer described above. Attention must be paid to manufacturer's guidelines and national standards when using such agents.

Carbon Steel

Due to the oxidisation of mild steel in moist air, the use of Carbon Steel is not recommended for any open systems, unless the internal humidity is controlled.

1.11 Internal corrosion in closed systems

In closed systems which are operated with oxygen free water, such as heating and solar systems, no corrosion can take place on metal pipework. For this reason, all material types and combinations are permissible, subject to specific material properties, i.e. temperature resistance. However, it is important that no oxygen penetrates the system.

In hot water systems, where the pH may be higher than normal, acidic corrosion of Zinc may occur leading to the production of Hydrogen and Zinc particles circulating in the water. This will not in itself damage the steel, but may affect the heating system due to the formation of hydrogen pockets, (gas cushion formation). For this reason internally galvanised materials are not recommended in heating installations.

1.12 External corrosion

Underground pipework

All underground pipes and connectors must be protected against mechanical action, by laying in a protective conduit. Metal pipes in addition require protection against external corrosion.

For stainless steel and Copper, anti-corrosive tape and heat-shrinkable sleeves in accordance with DIN 30672, Class A/B, (Corrosive/non corrosive ground), can be used. Pre-protected copper pipes can be used-provided they comply with the relevant standard, but the fittings will require separate protection, such as anti-corrosive tape or protective sleeve. Unalloyed steel requires external protection to DIN 30672 Class C. Pipes laid in insulation, beneath floors are to be regarded as being underground for protective purposes.

Exterior pipework

Generally exterior pipework needs to be protected against mechanical action and the admission of halogens, (Fl, Cl, Br, I).

Stainless Steel does not require any corrosion protection provided the surroundings do not contain chloride content derivatives such as frost protection additives, in which case a suitable coating should be applied.

Copper generally does not require any additional corrosion protection unless gas conduits are involved, in which case the pipe is to be treated as if it were underground.

Carbon Steel if used externally is to be regarded as if it were underground i.e. protected from both mechanical and chemical attacks.

Exposed Internal pipework

Stainless steel does not require any protective measures unless exposed to chloride based additives or when used in a swimming pool environment, in which case a protective coating should be applied.

Copper does not require any corrosion protection provided the environment does not contain any ammonium content derivatives, often linked to animal sheds, or meat processing plants, which must be avoided by the use of suitable coatings.

If Carbon Steel is exposed to prolonged moisture or corrosive substances in the atmosphere, in an internal environment, then additional corrosion protection is required.

If you are uncertain about the corrosive nature of the specified environment, please request a detailed environmental analysis from the client and contact the SANHA technical team for advice.

In general, there is no reason why pipework should not be painted. It should be checked that the paint used is fit for purpose and this is usually sought from the paint manufacturer. It is important when applying protective coatings retrospectively, to ensure that a completely uniform application is made to prevent a concentrated corrosive action in exposed areas, particularly in locations such as bracketry and wall penetrations.

2. Products

2.1 Applications

Application / Pipe Material number	Drinking water	Rainwater	Treated water	Heating water	Thermal solar systems	Steam condensate	Open cooling water systems	Closed cooling water systems	Firepoint supply lines	Sprinkler systems	Natural gas installations	Liquid gas installations	Fuel oil installations	Industrial applications	Compressed air systems	TTechnical gases
NiroSan® 1.4404 AISI 316 L	NiroSan® PURAPRESS®	NiroSan® PURAPRESS®	NiroSan® PURAPRESS®	NiroSan® PURAPRESS®	NiroSan® Industry	NiroSan®	NiroSan®	NiroSan® PURAPRESS®	NiroSan® PURAPRESS® (only wet systems) NiroSan® Industry (only dry systems)	NiroSan® (only wet systems) NiroSan® Industry (only dry systems)	NiroSan® Gas	NiroSan® Gas	NiroSan® Industry	NiroSan® Industry	NiroSan® Industry	NiroSan®
NiroSan®-F 1.4521 AISI 443/444	NiroSan® PURAPRESS® d ≤ 45 mm	NiroSan® PURAPRESS®	NiroSan® PURAPRESS®	NiroSan® PURAPRESS®	NiroSan® Industry	NiroSan®	NiroSan®	NiroSan® PURAPRESS®	NiroSan® PURAPRESS® (only wet systems)				NiroSan® Industry	NiroSan® Industry	NiroSan® Industry	NiroSan®
NiroSan®-ECO 1.4404 AISI 316 L	NiroSan® PURAPRESS®	NiroSan® PURAPRESS®	NiroSan® PURAPRESS®	NiroSan® PURAPRESS®	NiroSan® Industry	NiroSan®	NiroSan®	NiroSan® PURAPRESS®			NiroSan® Gas		NiroSan® Industry	NiroSan® Industry	NiroSan® Industry	NiroSan®
NiroTherm® 1.4301 AISI 304		NiroSan® NiroTherm®	NiroSan® NiroTherm®	NiroSan® NiroTherm® SANHA®-Therm	NiroSan® Industry NiroTherm® Industry	NiroSan® NiroTherm®	NiroSan® NiroTherm®	NiroSan® NiroTherm® SANHA®-Therm	Please contact our Technical Support				NiroSan® Industry NiroTherm® Industry	NiroSan® Industry NiroTherm® Industry	NiroSan® Industry NiroTherm® Industry	NiroSan® NiroTherm®
SANHA®-Therm Carbon steel 1.0034				SANHA®-Therm	SANHA®-Therm Industry			SANHA®-Therm	Please contact our Technical Support						SANHA®-Therm up to compressed air class 5	
SANHA®-Therm DZ Carbon steel 1.0034 Galvanized inside + outside								SANHA®-Therm		SANHA®-Therm (only wet systems)					SANHA®-Therm Industry	
Copper pipe DIN EN 1057/ DVGW-GW 392	SANHA®-Press PURAPRESS®	SANHA®-Press PURAPRESS®	SANHA®-Press PURAPRESS®	SANHA®-Press PURAPRESS®	SANHA®-Press Solar	SANHA®-Press	SANHA®-Press	SANHA®-Press PURAPRESS®	SANHA®-Press PURAPRESS® (only wet systems)		SANHA®-Press Gas	SANHA®-Press Gas	SANHA®-Press Gas	SANHA®-Press	SANHA®-Press Solar	SANHA®-Press Gas
MultiFit®-Flex PE-RT; Al; PE-RT	3fit®-Press 3fit®-Push	3fit®-Press 3fit®-Push	3fit®-Press 3fit®-Push	3fit®-Press 3fit®-Push				3fit®-Press 3fit®-Push						3fit®-Press 3fit®-Push	3fit®-Press 3fit®-Push up to compressed air class 5	3fit®-Press 3fit®-Push
MultiFit®-PEX PE-Xc				3fit®-Press 3fit®-Push				3fit®-Press 3fit®-Push								

recommended on demand only not suitable

Please pay particular attention to our technical documentation and installation instructions!
Technical customer support service: If you should have technical questions or questions concerning the areas of application, please do not hesitate to contact us at UK@sanha.com or 01628 819245

The most recent overview of applications and combination options is available for download at www.sanha.co.uk.

2.2 NiroSan® system press fittings and NiroSan® stainless steel system pipes

NiroSan® system press fittings

The press fittings bodies are produced from molybdenum-stabilised stainless steel pipe, material number 1.4404 / 316L, or precision stainless steel casting, material number 1.4408 / 316. The threaded parts are joined to the main body by plasma shielding gas welding and consist of stainless steel, material no. 1.4571. This material generally corresponds to 1.4404 / 316L quality, but contains an additional 0.8 % by weight max. of titanium as an alloy constituent to improve machinability. This guarantees the high NiroSan® product quality standard for these components. NiroSan® system fittings have a thread compliant with EN 10226 and ISO 7/1 (metal to metal sealing joint) with R/Rp pairing. The R stands for a conical (tapered) male thread and Rp for a parallel female thread.

NiroSan®, NiroSan®-ECO and NiroSan®-F stainless steel system pipes

Three different stainless steel pipe systems and four press system fittings for different applications are offered in this product family. The pipe systems are produced from material no. 1.4404 / 316L (NiroSan® and NiroSan®-ECO) or the nickel-free material 1.4521 (NiroSan®-F) and provided in 3 m and 6 m long tubes. The longitudinal welds on the pipes are produced by plasma shielding gas welding, meaning that an absolutely perfect seal, high mechanical strength and the necessary corrosion protection are guaranteed in the weld region. The pipes have a specified maximum strength in order to provide optimal conditions for reliable compression. All stainless steel pipes correspond to material 1.4404 / 316L with a molybdenum content of ≥ 2.3 % and a reduced carbon content.

Brief overview of NiroSan® press-fit stainless steel systems, material no. 1.4404 / 316L

Application	Dimension/rated pressure/ identification	Seal	Tool
NiroSan® * (9000 series)			
– drinking water – treated water – central heating – cooling water – service water and stormwater – fire-fighting systems**	d = 15 – 22 mm PN 40 d = 28 – 35 mm PN 25 d = 42 – 108 mm PN 16	**EPDM**, colour: black Max. continuous temp.: -30 °C to 120 °C (up to 150 °C short-term) KTW, ACS, ATA and WRAS requirements met	d = 15 – 54 mm Free choice of press machines and jaws or collars d = 64 – 108 mm ECO 3/ECO 301/ACO 202XL (see section 3.1)
NiroSan® Gas (17000 series)			
– flammable gases compliant with BSI	d = 15 – 108 mm PN 5/GT 5 Underground installation not permitted PN 5 GT / PN 5	**HNBR** colour: yellow Max. continuous temp.: -20 °C to 70 °C Compliant with DVGW G 5614	d = 15 – 54 mm Free choice of press machines and jaws or collars d = 76.1 – 108 mm, ECO 3/ ECO 301/ACO 202XL (see section 3.1)
NiroSan® Industry* (18000 series)			
– compressed air – solar thermal – cooling water – compressed air – bulk solids – industry applications – fire-fighting systems** – steam condensate	d = 15 – 22 mm PN 40 d = 28 – 35 mm PN 25 d = 42 – 108 mm PN 16 HT	**FKM**, colour: red Max. continuous temp.: -20 °C to 200 °C (depending on medium) Solar thermal up to 200 °C (short-term 280 °C) Resistant against oils and water, glycol mixtures, steam condensate 150 °C max.	d = 15 – 54 mm Free choice of press machines and jaws or collars d = 76.1 – 108 mm ECO 3/ECO 301 /ACO 202XL (see section 3.1)
NiroSan® SF* (19000 series)			
– Applications free from substances that that prevent paint adhesion (automotive industry, paint industry, painting shops, aircraft industry, etc.) compliant with BSI	d = 15 – 22 mm PN 40 d = 28 – 35 mm PN 25 d = 42 – 108 mm SF	**FKM**, colour: red Max. continuous temp.: -20 °C to 200 °C (depending on medium) Resistant against oils and water, glycol mixtures	d = 15 – 54 mm Free choice of press machines and jaws or collars d = 76.1 – 108 mm, ECO 3/ ECO 301/ACO 202XL (see section 3.1)

Materials:
Formed components: material no. 1.4404 / 316L compliant with EN 10088, precision stainless steel castings: material no. 1.4408 / 316 compliant with EN 10283 Pipes compliant with EN 10088: NiroSan® (bright and solution annealed, internal weld smoothing, upper strength limited) and NiroSan®-ECO, material no. 1.4404 / 316L, NiroSan®-F, material no. 1.4521, NiroTherm®***: material no. 1.4301 / 304 Pipe dimensions compliant with EN 10312 and DVGW GW 541.
Free from harmful constituents compliant with EN 10312, and compliant with the special requirements of DVGW standard GW 541.

* Max. operating pressure for technical gases (e.g. compressed air, argon, nitrogen, carbon dioxide): 16 bar.
For other gases, please contact our Technical Suppport for prior approval.
** See separate installation instructions
*** Not suitable for drinking water

You can choose from the following pipes, depending on the required flow rates or the determined nominal diameters:

NiroSan® | NiroSan®-F stainless steel system pipes

Nominal diameter DN	Outside diameter mm	Wall thickness mm	Weight of empty NiroSan® system pipe kg/m	Weight of empty NiroSan®-F system pipe kg/m	Water volume l/m
12	15	1	0.351	0.339	0.133
15	18	1	0.426	0.411	0.201
20	22	1.2	0.626	0.604	0.302
25	28	1.2	0.806	0.778	0.515
32	35	1.5	1.260	1.216	0.804
40	42	1.5	1.523	1.470	1.195
50	54	1.5	1.974	1.905	2.043
–	64	2	3.109	3.109	2.827
65	76.1	2	3.715	3.585	4.083
80	88.9	2	4.357	4.204	5.661
100	108	2	5.315	5.128	8.495

NiroSan®-ECO stainless steel system pipes

Nominal diameter DN	Outside diameter mm	Wall thickness mm	Weight of empty NiroSan®-ECO system pipe kg/m	Water volume l/m
12	15	0.6	0.217	0.150
15	18	0.7	0.304	0.216
20	22	0.7	0.374	0.333
25	28	0.8	0.546	0.547
32	35	1.0	0.852	0.855
40	42	1.1	1.128	1.244
50	54	1.2	1.588	2.091
65	76.1	1.5	2.805	4.197
80	88.9	1.5	3.287	5.795
100	108	1.5	4.005	8.659

2.3 NiroTherm® system fittings and NiroTherm® stainless steel system pipes

The press fitting bodies are produced from stainless steel pipe, material no. 1.4301 / 304. NiroTherm® system fittings have a thread compliant with EN 10226 and ISO 7/1 (metal to metal sealing joint) with R/Rp pairing. The R stands for a conical (tapered) male thread and Rp for a parallel female thread.

NiroTherm® system fittings are especially suitable for installation beneath screed or in other areas where moisture may cause external corrosion in other materials. In contrast to carbon steel, expensive insulation can be dispensed with, unless to protect against mechanical action.

NiroTherm® Industry system fittings are also suitable for use in compressed air, coolant, fuel oil and diesel fuel lines.

Brief overview of NiroTherm® press-fit stainless steel systems, material no. 1.4301 / 304

Application	Dimension/rated pressure/ identification	Seal	Tool
NiroTherm® * (91000 series)			
– treated water – central heating (e.g. in screed) – central heating – cooling water – steam condensate – service water and stormwater – fire-fighting systems**	d = 15 – 108 mm PN 16**** 	**EPDM**, colour: black Max. continuous temp.: -30 °C to 120 °C (up to 150 °C short-term)	d = 15 – 54 mm Free choice of press machines and jaws or collars d = 64 – 108 mm ECO 3/ECO 301 /ACO 202 XL (see section 3.1)
NiroTherm® Industry* (98000 series)			
– compressed air – solar thermal – cooling water – compressed air – bulk solids – industry applications – fire-fighting systems**	d = 15 – 108 mm PN 16**** 	**FKM**, colour: red Max. continuous temp.: -20 °C to 200 °C (depending on medium) Solar thermal up to 200 °C (short-term 280 °C) Resistant against oils and water, glycol mixtures	d = 15 – 54 mm Free choice of press machines and jaws or collars d = 76.1 – 108 mm ECO 3/ECO 301 /ACO 202 XL (see section 3.1)
Materials: Formed components: Material no.: 1.4301 / 304 compliant with EN 10088 Pipes: NiroTherm®***: Material no.: 1.4301 / 304 compliant with EN 10088 Pipe dimensions compliant with EN 10312 and DVGW GW 541, bright and solution annealed, upper strength limited			

* Max. operating pressure for technical gases (e.g. compressed air, argon, nitrogen, carbon dioxide): 16 bar
** See separate installation instructions
*** Not suitable for drinking water
**** Higher pressures on request

Please note that NiroTherm® may not be used in drinking water installations.

NiroTherm® stainless steel system pipes				
Nominal diameter DN	Outside diameter mm	Wall thickness mm	Weight of empty NiroTherm® system pipe kg/m	Water volume l/m
12	15	0.6	0.214	0.150
15	18	0.7	0.301	0.216
20	22	0.7	0.370	0.333
25	28	0.8	0.540	0.547
32	35	1.0	0.844	0.855
40	42	1.1	1.117	1.244
50	54	1.2	1.573	2.091
65	76.1	1.5	2.777	4.197
80	88.9	1.5	3.254	5.795
100	108	1.5	3.965	8.659

Please note that NiroTherm® system pipes may not be used in drinking water installations.

2.4 SANHA®-Press system fittings and copper pipes

SANHA®-Press/PURAPRESS® system fittings

All SANHA®-Press system fittings (SANHA®-Press, SANHA®-Press Gas, SANHA®-Press Solar, SANHA®-Press Chrome, SANHA®-Press White) are produced from copper and copper alloys. The copper press fittings are produced – in particular in terms of design, material and surface properties – from Cu-DHP, material no. CW024A, to EN 12449, based on EN 1254-1. The fittings are free of carbon films and drawing agent residues, and fall substantially below the required maximum values. In addition, the properties of the inner surface do not promote microbiological growth. The red bronze (11000 and 13000 series) or lead-free silicon bronze (PURAPRESS 8000 series) press fittings are used for adapters and, in addition to the press-fit joint, possesses at least one threaded end compliant with EN 10226 and ISO 7/1, type R/Rp). They consist of CuSn5Zn5Pb2-C (CC499K) compliant with EN 1982 or CuZn21Si3P (CW724R-DW). The fittings are free of faults such as shrinkage cavities, pores, cracks, casting and forming residues.

PURAPRESS® press fittings consist of a particularly low-corrosion copper alloy (lead-free silicon bronze, CuSi). They are used as adapter fittings for copper and stainless steel pipes and, in addition to the press-fit joint, possesses at least one threaded end corresponding to EN 10226 and ISO 7/1, type R/Rp) or an additional press-fit joint. The press fittings can be combined with copper pipe (conforming to EN 1057 and DVGW GW 392) and the following SANHA stainless steel pipe types:

- NiroSan®-F (1.4521 nickel-free/444)
- NiroSan® ECO (1.4404/316L)
- NiroSan® (1.4404/316L)
- NiroTherm® **(1.4301/304)

The fittings are free of faults such as shrinkage cavities, pores, cracks, casting and forming residues, and display no cast porosity as a result of the high material density.

Because they are dezincification resistant and free from stress crack corrosion, PURAPRESS® series fittings represent an optimal solution in terms of corrosion resistance (equivalent to red bronze) and present a premium hygiene solution due to the pure, lead-free alloy.

Typical applications for the PURAPRESS® system are drinking water, central heating, cooling and compressed air.

Brief overview of SANHA®-Press copper and red brass fittings

Application	Dimension/rated pressure/ identification	Seal	Tool
SANHA®-Press * (6000 series)			
– drinking water – treated water – central heating – cooling water – service water and stormwater	d = 12 – 108 mm PN 16 Fittings without additional external colour identification	**EPDM**, colour: black Max. continuous temp.: -30 °C to 120 °C (up to 150 °C short-term) KTW, ACS, ATA and WRAS requirements met	d = 15 – 54 mm Free choice of press machines and jaws or collars d = 64 – 108 mm, ECO 3/ECO 301/ ACO 202 X (sees ection 3.1)
SANHA®-Press Gas * (10000/11000 series)			
– flammable gases compliant with DVGW G 260	d = 15 – 54 mm PN 5/GT-PN 1 Underground installation not permitted PN 5 GT / PN 1	**HNBR** Colour: yellow Max. continuous temp.: -20 °C to 70 °C Requirements compliant with DVGW G 5614 met	d = 15 – 54 mm Free choice of press machines and jaws or collars (see section 3.1)
SANHA®-Press Solar * (12000/13000 series)			
– solar thermal – compressed air – cooling water – industry applications - steam condensate	d = 12 – 108 mm PN 16 HT	**FKM**, colour: red Max. continuous temp.: -20 °C to 200 °C (depending on medium) Solar thermal up to 200 °C (short-term 280 °C) Resistant against oils and water, glycol mixtures	d = 15 – 54 mm Free choice of press machines and jaws or collars d = 64 - 108 ECO 3/ECO 301/ ACO 202 X (see section 3.1)
Materials: Formed components: Material no.: CW024A (Cu-DHP) compliant with EN 1254 Continuous and sand cast parts: Material no.: CC499K (CuSn5Zn5Pb2-C) compliant with EN 1282, Copper pipe: Material no.: CW024A (Cu-DHP) compliant with EN 1057 Pipes: Pipe dimensions compliant with EN 1057 and DVGW-GW 392			

* Max. operating pressure for technical gases (e.g. compressed air, argon, nitrogen, carbon dioxide): 16 bar

Brief overview of PURAPRESS® lead-free, silicon bronze fittings			
Application	**Dimension/rated pressure/ identification**	**Seal**	**Tool**
PURAPRESS® (8000 series)			
– drinking water – central heating – cooling – compressed air*	d = 12 – 108 mm PN 16 Fittings without additional external colour identification CuSi identification	**EPDM**, colour: black Max. continuous temp.: -30 °C to 120 °C (up to 150 °C short-term) KTW, ACS, ATA and WRAS requirements met	d = 15 – 54 mm Free choice of press machines and jaws or collars d = 64 – 108 mm ECO 3/ECO 301/ ACO 202 XL (see section 3.1)
Materials: Fittings: silicon bronze CuZn21Si3P (CW724R-DW) Pipes: Copper pipes compliant with EN 1057 and DVGW GW 392, stainless steel system pipes compliant with EN 10088 (NiroSan® and NiroSan®-ECO, material no. 1.4404 / 316L, bright and solution annealed, upper strength limited NiroSan®-F, material no. 1.4521, NiroTherm, material no. 1.4301 / 304**) Internal pipe surface: pipe dimensions compliant with EN 10312 and DVGW GW 541, free from harmful constituents compliant with EN 10312, and the special requirements of DVGW standard GW 541.			

* Residual oil content up to Class 5 max.
** Not suitable for drinking water

Copper installation pipes

All copper pipes corresponding to EN 1057 and DVGW standard GW 392 can be joined assuming the minimum wall thicknesses (see adjacent table) are adhered to:

Copper pipes compliant with EN 1057 in combination with SANHA®-Press/PURAPRESS®										
Outside diameter/wall thickness [mm]	0.6	0.7	0.8	0.9	1.0	1.1	1.2	1.5	2.0	2.5
12	X	X	X		X					
14			X		X					
15		X	X		X					
16					X					
18			X		X					
22				X	X	X	X	X		
28				X	X		X	X		
35					X		X	X		
42					X		X	X		
54							X	X	X	
64									X	
66.7							X		X	
76.1								X	X	
88.9									X	
108								X*		X

* pressed only with "Copper only" sling article no 16934

National standards and guidelines relevant to the application must be observed.
If other dimensions are needed, please do not hesitate to contact us at uk@sanha.com or call 01628 819245.

2.5 SANHA®-Therm system fittings and carbon steel pipes

SANHA®-Therm system fittings and SANHA®-Therm DZ system pipes
SANHA®-Therm press fittings

The press fitting bodies are produced from unalloyed, externally galvanised steel with material no. 1.0034 (E 195). Individual articles are produced from Cu-DHP based on EN 1254-1, material no. CW024A, with external surface finish compliant with EN 12449 or of a copper alloy compliant with EN 1982, with external surface finish. They are sealed using EPDM sealing rings (SANHA®-Therm 24000 series) or FKM sealing rings (SANHA®-Therm Industry 28000 series).

SANHA®-Therm system fittings have a thread compliant with EN 10226 and ISO 7/1 (metal to metal sealing joint) with R/Rp pairing, where R stands for a conical (tapered) male thread and Rp for a parallel female thread.

Brief overview of SANHA®-Therm unalloyed steel press-fit systems (not suitable for drinking water)

Application	Dimension/rated pressure/identification	Seal	Tool
SANHA®-Therm (24000 series)			
– central heating* – cooling water – dry compressed air ** – industry – sprinklers *** – solar **** – vacuum up to 200 mbar	d = 12 – 108 mm PN 16	**EPDM**, colour: black Max. continuous temp.: -30 °C to 120 °C (up to 150 °C short-term)	d = 12 – 54 mm Free choice of press machines and jaws or collars d = 76,1 – 108 mm ECO 3/ECO 301/ ACO 202XL (see section 3.1)
SANHA®-Therm Industry* (28000 series)			
– central heating* – cooling water – dry compressed air – industry – sprinklers – solar ****	d = 12 – 108 mm PN 16 HT	**FKM**, colour: red Max. continuous temp.: -20 °C to 200 °C (depending on medium) Solar thermal up to 200 °C (short-term 280 °C) Resistant against oils and water, glycol mixtures	d = 12 – 54 mm Free choice of press machines and jaws or collars d = 76.1 – 108 mm ECO 3/ECO 301/ ACO 202XL (see section 3.1)

Materials:
Formed components: Material no.: 1.0034 (E 195) compliant with EN 10305, externally galvanised compliant with DIN 50961,
Continuous and sand cast parts: Material no.: CW024A (Cu-DHP) compliant with EN 1254 Surface treated externally and internally
Pipes: Material no.: CC499K (CuSn5Zn5Pb2-C) compliant with EN 1254, compliant treated externally and internally
Material no.: 1.0034 (E 195) compliant with EN 10305, pipe dimensions compliant with EN 10305, externally galvanised compliant with DIN 50961, thickness between 8 - 15 µm (SANHA®-Therm system pipe)
SANHA®-Therm and SANHA®-Therm Industry system fittings can be directly connected to NiroTherm® system for central heating and compressed air applications if the system is sealed, dry and appropriately oil-free.**

* SANHA®-Therm DZ pipes up to 45 °C only
** Residual oil content with EPDM sealing ring up to Class 5 max.;
no residual oil content restriction with FKM sealing ring and SANHA®-Therm DZ system pipe
*** See separate installation instructions
**** Only in conjunction with special FKM sealing ring in a closed system

SANHA®-Therm system pipes are produced from unalloyed steel, material no. 1.0034 (E 195) compliant with EN 10305, externally galvanised and provided in 3 m and 6 m long tubes. The pipes have a specified maximum strength in order to provide optimal conditions for reliable compression.

Please note the instructions discussed in Section 1.2 on corrosion protection in SANHA®-Therm products!

You can choose from the following pipes, depending on the required flow rates or the nominal diameters determined in the pipe network analysis:

SANHA®-Therm system pipe				
Nominal diameter DN	Outside diameter mm	Wall thickness mm	Weight of empty SANHA®-Therm system pipe	Water volume l/m
10	12	1.2	0.320	0.072
12	15	1.2	0.408	0.125
15	18	1.2	0.497	0.191
20	22	1.5	0.758	0.284
25	28	1.5	0.980	0.491
32	35	1.5	1.239	0.804
40	42	1.5	1.498	1.195
50	54	1.5	1.942	2.043
65	76.1	2	3.655	4.083
80	88.9	2	4.286	5.661
100	108	2	5.228	8.495

2.6 3fit®-Press and 3fit®-Push: System fittings for multi-layered composite pipes

3fit®-Press Pb-free and PPSU system fittings (16 – 63 mm)

The press fitting bodies are produced from lead-free silicon bronze CuSi from the material CuZn21Si3P (CW724R-DW). Internal sealing against the pipe is by means of two EPDM sealing rings. This tried and tested jointing type for flexible pipe systems provides an excellent supplement to metal press joints. The 3fit®-Press Pb-free (25000 series) and PPSU (35000 series) system fittings are marked with SANHA 3fit®-Press on the press sleeve. They are tested and approved by DVGW and other international certifying agencies. The system fittings can be used with all MultiFit®-Flex, MultiFit®-PEX and MultiFit®-PE-RT system pipes for an exhaustive range of applications.

The press fittings can be pressed with press jaws with TH, B, F, H, U original profiles.

3fit®-Press Pb-free fittings (25000 series) are the optimal solution in terms of corrosion resistance, because they are dezincification resistant and free from stress crack corrosion (equivalent to red bronze). They display no cast porosity thanks to the high material density. The pure, lead-free alloy makes these fittings a premium hygiene solution. 3fit®-Press PPSU fittings (35000 series) are especially economical and optimal for project business.

Brief overview of 3fit®-Press system

Application	Dimension/rated pressure/identification	Seal	Tool
3fit®-Press PbFree*			
– drinking water**	d = 16 – 63 mm PN 16 (at 25 °C) PN 10 (at 70 °C)	**EPDM**, colour: black Max. continuous temp.: -30 °C to 70 °C (short-term up to 95 °C) KTW requirements met	d = 16 – 63 mm free choice of press tools with TH, B, H, F, U original profile (see section 3.1)
– central heating			
– cooling water			
– compressed air ***			
3fit®-Press PPSU*			
– drinking water**	d = 16 – 32 mm PN 16 (at 25 °C) PN 10 (at 70 °C)	**EPDM**, colour: black Max. continuous temp.: -30 °C to 70 °C (short-term up to 95 °C) KTW requirements met	d = 16 – 63 mm free choice of press tools with TH, B, H, F, U original profile (see section 3.1)
– central heating			
– cooling water			
– compressed air ***			

Materials:
Fittings: Material no.: Material no.: CW 724R-DW (CuZn21Si3P)
Pipes: MultiFit®-Flex plastic composite pipe compliant with DIN 16833 – 34 consisting of:
inliner material: PE-RT; stabilisation pipe: aluminium layer; outer skin material: PE-RT or -HD
MultiFit®-PEX plastic composite pipe consisting of PE-Xc inner and outer pipe walls, oxygen barrier layer in between (EVOH); PN 6 (at 70 °C), MultiFit®-PE-RT plastic pipe with oxygen barrier layer (EVOH): PN 6

* Max. operating pressure for technical gases (e.g. compressed air, argon, nitrogen, carbon dioxide): 10 bar
** Only in conjunction with MultiFit®-Flex system pipe
*** Residual oil content up to Class 5 max.

3fit®-Push system fittings (16 – 20 mm)

The push fitting bodies are produced in sizes 16 mm and 20 mm. The main fitting body consists of a copper alloy, the casing of PPSU. Internal sealing is by means of two EPDM sealing rings.

Brief overview of 3fit®-Push system

Application	Dimension/rated pressure/identification	Seal	Tool
3fit®-Push*			
– drinking water**	d = 16 - 20 mm PN 16 (at 25 °C) PN 10 (at 70°C)	**EPDM**, colour: black Max. continuous temp.: -30 °C to 70 °C (short-term up to 95 °C) KTW requirements met	No press tools necessary (push-connection)
– central heating			
– cooling water			

Materials:
Fittings: CC499K (CuSn5Zn5Pb2-C) compliant with EN 1282 and CW724R-DW
Pipes: MultiFit®-Flex plastic composite pipe compliant with DIN 16833 – 34 consisting of PE-RT, aluminium layer and PE-HD
MultiFit®-PEX plastic composite pipe consisting of PE-Xc inner and outer pipe walls,
oxygen barrier layer in between (EVOH); PN 6 (at 70 °C)

* Max. operating pressure for technical gases (e.g. compressed air, argon, nitrogen, carbon dioxide): 10 bar
** Only in conjunction with MultiFit®-Flex system pipe
*** Residual oil content up to Class 5 max.

MultiFit®-Flex system pipes

MultiFit®-Flex system pipes are produced as 5-layer composite pipes with PE-RT plastic inner pipe, laser butt welded aluminium pipe forming an oxygen barrier and PE-HD or PE-RT outside pipe.
Thanks to their corrosion safety, MultiFit®-Flex system pipes can be used in all central heating and drinking water installation applications.
You can choose from the following pipes, depending on the required flow rate or the determined nominal diameter:



MultiFit®-Flex system pipes

Nominal diameter DN	Outside diameter mm	Wall thick-ness mm	Weight of empty MultiFit®-Flex system pipe kg/m	Water volume l/m
10	12	1.2	0.320	0.072
12	15	1.2	0.408	0.125
15	18	1.2	0.497	0.191
20	22	1.5	0.758	0.284
25	28	1.5	0.980	0.491
32	35	1.5	1.239	0.804
40	42	1.5	1.498	1.195
50	54	1.5	1.942	2.043
65	76.1	2	3.655	4.083
80	88.9	2	4.286	5.661
100	108	2	5.228	8.495

MultiFit®-PEX system pipes

SANHA also offers the 5-layer plastic composite pipe MultiFit®-PEX, in particular for heating and cooling applications. It consists of radiation cured PE-Xc and a special plastic oxygen barrier (EVOH).



MultiFit®-PE-RT system pipes

Nominal diameter DN	Outside diameter mm	Wall thick-ness mm	Weight of empty MultiFit®-Flex system pipe kg/m	Water volume l/m
10	16	2.0	0.091	0.113

2.7 PURAFIT®: Silicon bronze threaded fittings

PURAFIT® threaded fittings (3000 series) are produced from lead-free silicon bronze, material no. CW724R-DW (CuZn21Si3P). The copper alloy used here is suitable for long term use in drinking water installations, because it exceeds the stringent requirements placed on the lead limit value in drinking water: Because if it doesn't contain any lead, it can't release any into the system.

The threaded fittings have a thread compliant with EN 10226 and ISO 7/1 (metal to metal sealing joint) with an R/Rp pairing. The R stands for a conical (tapered) male thread and Rp for a parallel female thread.

An additional sealing agent is employed to compensate for different surface finishes and production tolerances (e.g. hemp as a sealing agent substrate in combination with a sealing agent approved for drinking water and gas installations).

The sealing agent substrate is applied sparingly during installation, so that the tips of the threads remain visible.

SANHA® threaded fittings operating conditions PURAFIT® lead-free silicon bronze fittings

Dimensions	Operating pressure
Water and aqueous solutions	
1/4"...3/4"	25 bar up to 120 °C
	16 bar up to 225 °C
1"...3"	16 bar up to 120 °C
	6 bar up to 225 °C
Flammable gases (DVGW-G 260)	
1/4"...3"	5 bar
Technical gases (non-toxic, non-flammable)	
1/4"...3"	16 bar/depending on application
Thread type: Pipe thread: R/Rp thread compliant with EN 10226, Fixing thread (union nut): G thread (cylindrical) compliant with ISO 228	

2.8 Threaded malleable cast iron fittings +S+

Black and galvanised malleable cast iron fittings compliant with EN 10242, symbol A. SANHA threaded fittings are produced from EN-GJMB-350-10 malleable cast iron compliant with EN 1562, corresponding to design symbol A, EN 10242. These fittings are provided with connecting threads according to EN 10226 and ISO 7/1.

Thanks to their high vibration and impact strength, these high quality and extremely robust malleable cast iron fittings can be employed even under the most demanding conditions.

Operating conditions for SANHA® +S+ malleable cast iron threaded fittings

Dimensions	Operating pressure
Water and aqueous solutions	
3/8"...4"	25 bar from -20 °C to 120 °C
	Interpolated values from 120 °C to 300 °C
	20 bar up to 300 °C
Technical gases (non-toxic, non-flammable)	
3/8"...4"	16 bar/depending on application
Flammable gases (DVGW-G 260)	
3/8"...4"	1 bar
Thread type: Pipe thread: R/Rp thread compliant with EN 10226, Fixing thread (union nut): G thread (cylindrical) compliant with ISO 228	

2.9 Pressure loss tables for metal and composite pipes

The appropriate tables for pipe frictional resistance and flow velocities, depending on the flow rate and medium temperature, can be downloaded from our web site, www.sanha.co.uk.

2.10 Pressure loss coefficients (zeta values) for system fittings

The appropriate tables with the Zeta values for the fittings of the series NiroSan®, SANHA®-Press, SANHA®-Therm, PURAPRESS®, 3fit®-Press and 3fit®-Push can be downloaded from our website, www.sanha.co.uk.

2.11 Linear thermal expansion of pipes

Pipes expand to different degrees, depending on the material and temperature difference. If the pipes are prevented from expanding their length, the mechanical tensions within the pipe material can exceed the fracture strength, which can result in damage, generally in the form of fatigue failure. To avoid this, the pipe must have sufficient space for expansion.

Thermal expansion of different pipe materials

Pipe material	Coefficient of thermal expansion a [10-6 K-1] (20 °C to 100 °C)	ΔI [mm] for l0 = 10 m ΔT = 50 K
Stainless steel	16.5	8.3
Copper	16.6	8.3
Galvanised steel pipe	12.0	6.0
Composite pipe	23.0	11.0
MultiFit®-Flex	23.0	11.0
MultiFit®-PEX	200.0	100.0

The flexibility of the pipeline can often be used to compensate for linear expansion. To achieve this, whenever the pipeline changes direction, it is necessary to provide flexible pipe limbs, by arranging the pipe fastenings accordingly.

The fundamental principle is there must always be sufficient opportunity for expansion between two anchors.

If the normal pipe routeing does not allow sufficient compensation of thermal expansion, this must be achieved by installing special components, e.g. metal axial compensators. If enough space is available, a compensation loop may also be used.
Further information can be found in our technical information "Thermal Expansion", which can be downloaded at www.sanha.co.uk.

In the case of a concealed or buried installation, unimpeded thermal expansion must be ensured by encapsulating the pipes with elastic , chloride-free material, of sufficient thickness. Ceiling ducts, in particular, must be padded thoroughly, unless a fixed point is installed there deliberately.

Thermal expansion of metal pipes (mm)

Pipe length (m)	Temperature difference (K)								
	Copper			Stainless steel			Galvanised steel		
	30	50	70	30	50	70	30	50	70
1	0.50	0.83	1.16	0.50	0.83	1.16	0.36	0.60	0.84
5	2.48	4.13	5.72	2.48	4.13	5.72	1.80	3.00	4.20
10	4.95	8.25	11.55	4.95	8.25	11.55	3.60	6.00	8.40

Axial compensator installation sketches

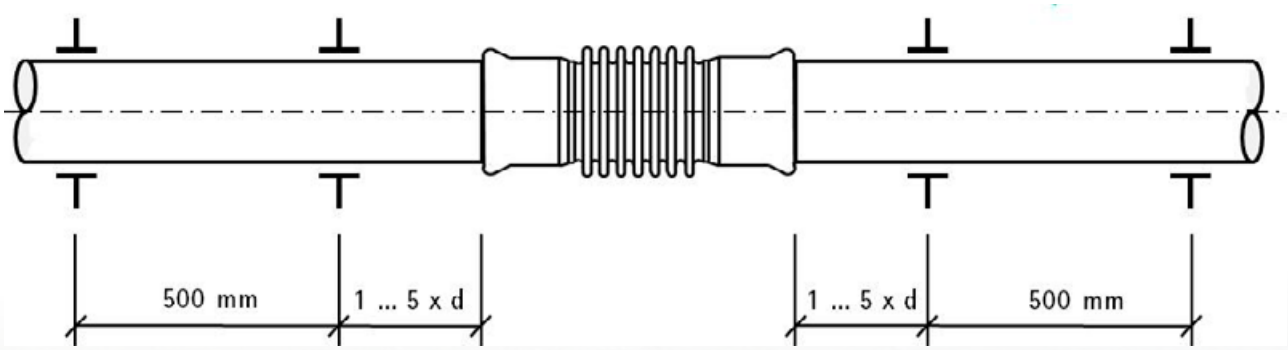

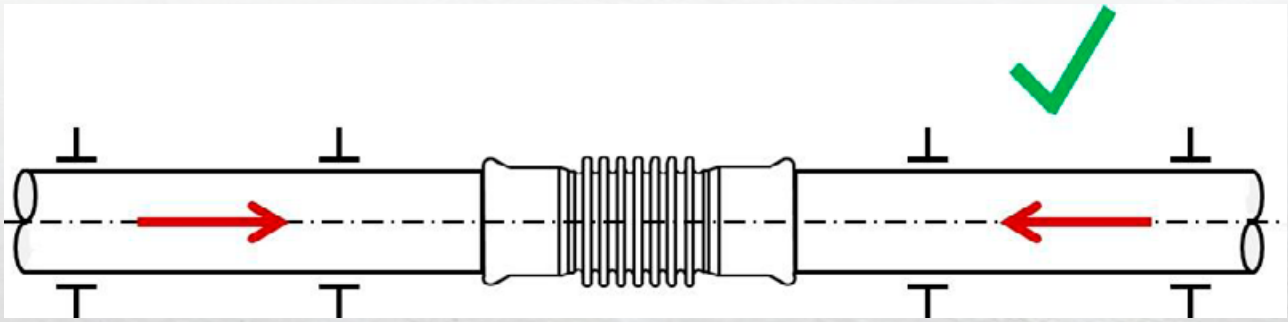

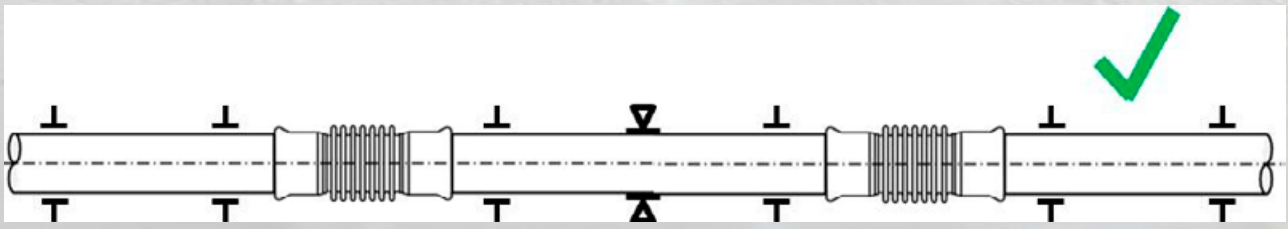



2.12 Tool spacing

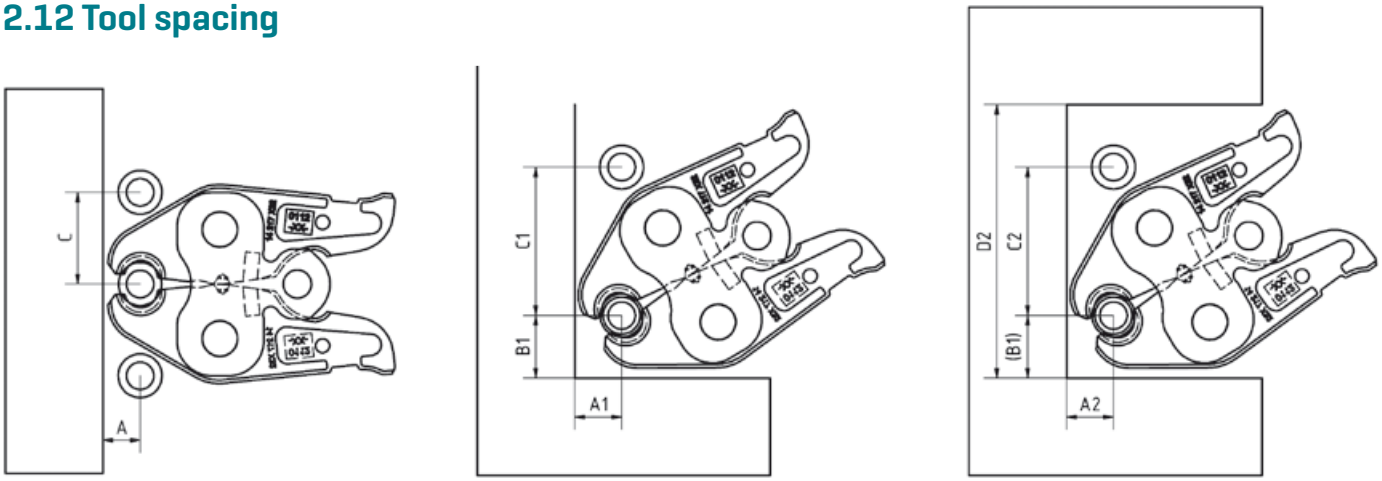

Installation space SA12-SA35								
DN	A	C	A1	B1	C1	A2	C2	D2
12	19	46	24	32	76	24	76	140
14	19	47	24	32	76	24	76	140
15	19	48	24	32	76	24	76	140
16	19	49	24	32	76	24	76	140
18	19	50	24	32	76	24	76	140
22	23	60	29	37	81	29	81	155
28	23	63	29	37	85	29	85	159
35	23	74	31	50	82	31	82	182

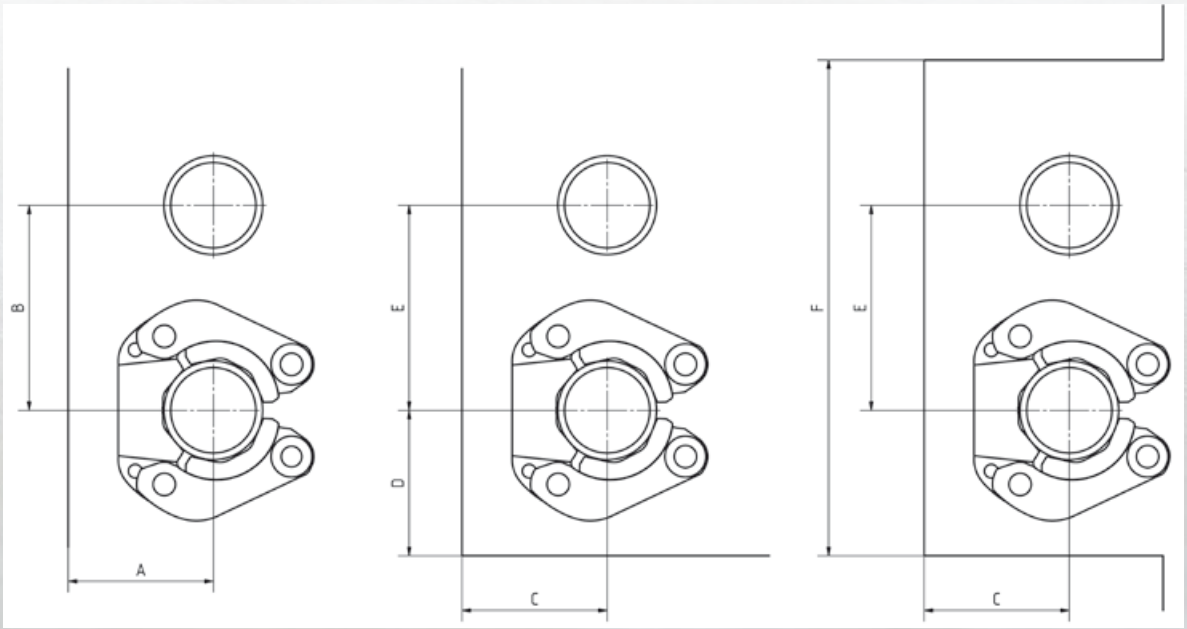

Installation space 42 - 54						
DN	A	B	C	D	E	F
42	75	115	75	75	115	265
54	85	120	85	85	120	290

2.13 Pipe support spacing

Pipes should be fixed to a load bearings substrate using proprietary pipe brackets, and should not be connected to other pipes. Clamps with rubber inserts should be used to meet noise abatement requirements.

Maximum spacing for supporting plastic pipes

Outside diameter of pipe mm	L1 mm	
	Cold water	Hot water
16	600	250
> 16 to ≤ 20	700	300
> 20 up to ≤ 25	800	350
> 25 up to ≤ 32	900	400
> 32 up to ≤ 40	1,100	500
> 40 up to ≤ 50	1,250	600
> 50 up to ≤ 63	1,400	750
> 63 up to ≤ 75	1,500	900
> 75 up to ≤ 90	1,650	1,100
90 up to ≤ 110	1,850	1,300

Maximum spacing for supporting metal pipes

Pipes should be fixed directly to the building using proprietary pipe brackets, as described above, and should not be attached to other pipes. Brackets should only be clamped to the pipe and not to a fitting. A minimum distance between changes in direction must also be observed as this may act as an unintentional fixed point. Similarly, other apparatus or devices may also act as a fixed point, and need to be taken into consideration.

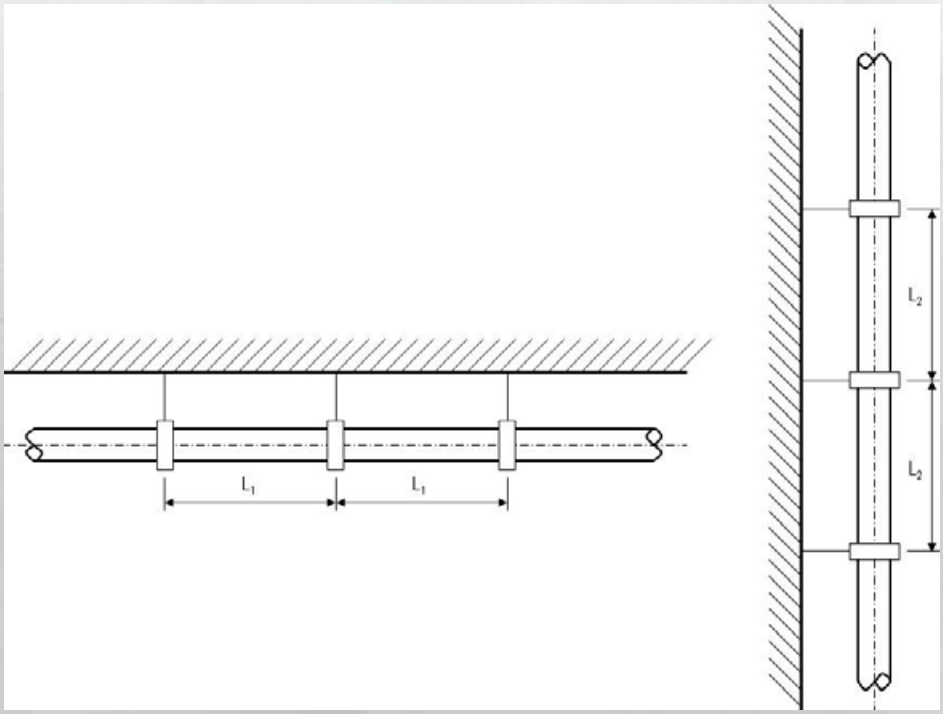

Maximum spacing for supporting metal pipes			
d [mm]		Support spacing for the horizontal pipe string* L1 [m]	Support spacing for the vertical pipe string* L2 [m]
Copper pipe compliant with EN 1057/ DVGW GW 392	Stainless steel pipe compliant with EN 10312/ DVGW GW 541		
12	–	1.00	1.50
15	15	1.20	1.80
18	18	1.20	1.80
22	22	1.80	2.40
28	28	1.80	2.40
35	35	2.40	3.00
42	42	2.40	3.00
54	54	2.70	3.60
64	64	3.00	3.60
66.7	–	3.00	3.60
76.1	76.1	3.00	3.60
88.9	88.9	3.00	3.60
108	108	3.00	3.60
* The spacing between the supports for copper pipe may vary depending on the locally adopted dimensions as a result of the different wall thicknesses and hardnesses.			

2.14 Allowable bending radius

Stainless Steel*, Copper and Carbon Steel can be cold-bent, within limits, using suitable bending tools. For SANHA Stainless steel and Carbon Steel, a bending radius, measured in the bends neutral axis, of at least r=3.5*d can be achieved, whilst for Copper, r=3*d. Care should be taken to ensure that following bending, a sufficient piece of cylindrical pipe is available for making further connections. Tighter radii may be achieved but the manufacturer of the bending tool is responsible for the end result. SANHA therm system pipes can be cold-bent up to a dimension of 28 mm.

MultiFit®-Flex, MultiFit®-PEX and MultiFit®-PE-RT plastic composite pipes can be bent by hand, using bending springs and machines. Depending on the bending method used, the minimum bending radius of r = 2 x d with bending aid and r = 5 x d without bending aid must be adhered to. The pipe on either side of the pressing may not be bent until at least 1 x d (outside diameter) away from the nearest fitting.

Overview of bending radiuses for MultiFit®-Flex				
Dimension	W/o bending aid		With bending aid	
16 mm	5 x d	80 mm	2 x d	32 mm
20 mm	5 x d	100 mm	2 x d	40 mm
26 mm	10 x d	260 mm	5 x d	130 mm
32 mm	-	-	5 x d	160 mm
40 mm	-	-	5 x d	200 mm
50 mm	-	-	5 x d	250 mm
63 mm	-	-	5 x d	315 mm

Hot bending of stainless steel and carbon steel pipes is not permissible. Copper pipes must not be bent hot bent in drinking water installations up to and including 28 mm.

*** only NiroSan® and NiroSan® F**

2.15 Space requirements

The pipe spacing in relation to walls, corners and slots, necessary for a secure installation is laid out in the drawings and tables below.

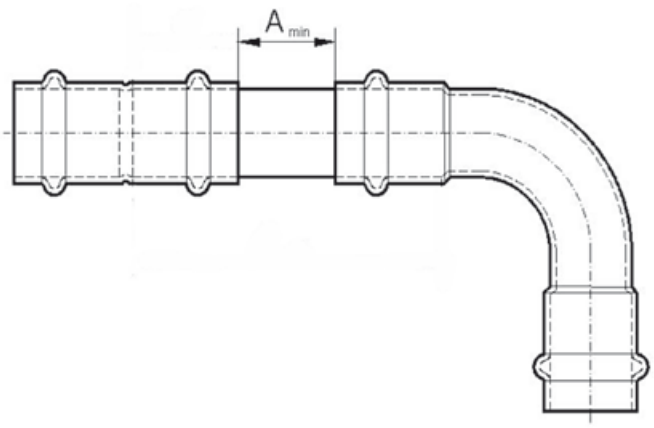

Minimum spacing between two pressing points
(see table below)

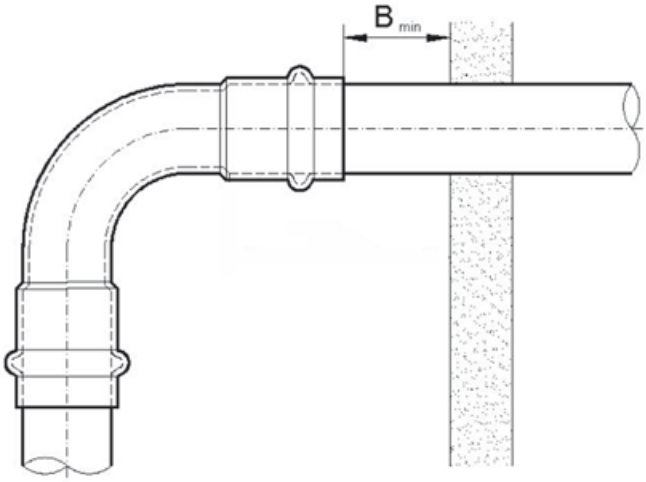

Minimum distance to wall
(see table below)

Minimum distances

Outside pipe diameter in mm	Nominal diameter DN	Minimum distance in mm	
		A_{min}	B_{min}
12	10	10	60
15	12	10	60
18	15	10	60
22	20	10	60
28	25	10	60
35	32	10	60
42	40	20	60
54	50	20	60
64	50	30	60
66.7	50	30	60
76.1	65	30	60
88.9	80	30	60
108	100	30	60

3. Pipe joints

3.1 Recommended press tools

3.1.1 General requirements

SANHA is the only manufacturer of press systems who guarantees the tightness of the press connection for standard applications, regardless of the manufacturer of the pressing tools, if the machines and press jaws fulfil the following requirements:

- The press tools must be serviced and maintained in line with the respective manufacturer's guidelines.
- Compact press machines (up to and including 28 mm) must use a minimum press force of 18 kN.
- Conventional and electronic press machines (up to and including 108 mm) must use a minimum press force of 30 kN.
- For metallic pipe joints up to and including 54 mm diameter, the press jaws and collars for M-MM type press joints must have the original SA, M or V profiles.
- For metallic pipe joints greater than 54 mm diameter, the press jaws and collars for M-MM type press joints must have the original SA or M profiles.
- For 3fit®-Press Pb-free and PPSU system joints the press jaws up to and including 32 mm must have the original TH, B, F, H or U profile. From 40 mm up only the TH profile may be used.
- The SANHA installation instructions for the respective system must be adhered to.
- When using press tools and press machines it is important that the manufacturer's instructions are adhered to, in particular those relating to the combination of tools and machines from different manufacturers.
- The use of press tools in press machines from different manufacturers is only permitted with the express permission of the respective manufacturer.
- Tool compatibility does not apply to special applications, such as fire prevention systems facilities and industrial applications. The appropriate high-pressure press machines and press collars may be used here. Should you require any assistance in this regard, please do not hesitate to contact us at uk@sanha.com or call 01628 819245.

3.1.2 SANHA press tools for metal and plastic joints



Every SANHA press machine is provided with a round servicing badge. The markings on this badge indicate when the machine must be sent for its next service to either Novopress or a Novopress authorised workshop. If regularly serviced (annually), the guarantee is increased to three years.

Press machines from other system providers and machine manufacturers must be inspected or serviced according to their instructions at least annually.

The press jaws are subject to high alternating forces. In extreme cases this can lead to material fatigue, but at the very least to substantial wear, in particular on the bolt. To prevent dangerous accidents, SANHA press jaws must be regularly serviced. The press jaws are generally provided with an inspection badge, displaying the date of the next service. If regularly serviced annually the guarantee on SANHA press jaws and press collars increases to up to five years.

Conventional and electronically controlled press machines are different. Conventional press machines adopt an identical press cycle with the same force applied each time. Electronically controlled press machines have a microprocessor within the tool which monitors and controls the force applied and optimises the cycle, depending on material type and dimension of fitting. This significantly prolongs the life of the tool and jaws, and also ensures a more precise press..

3.2 Metallic pipe joints

The procedure for producing a press joint is identical for all metal SANHA® press systems. A permanent seal, profile and force-tight connection is described below using the NiroSan® press system as an example. The pipe ends must be clean, free from any scratches, grooves or other damage, for a length equivalent to at least the insertion depth, to produce a perfect press joint.

Caution, please note:

- **Post-pressing adjustment of pressed components is not allowed.**
- **Only the press tools listed in the separate installation instructions may be used to produce fixed, water-based fire-fighting systems. Systems available at www.sanha.com/en/downloads/brochures/.**
  The associated maximum allowable operating pressures can be taken from the VdS certificate.
- **Post-pressing insertion depth marking on the pipe is not permitted.**
- **Only press tools that are regularly serviced in accordance with the respective press tool manufacturers instructions, are mechanically well maintained and in an excellent physical condition should be used.**

3.2.1 Dimension d = 12 to 35 mm (making the press joint using press jaws)

1. Cut pipes to length at a right angle using either a pipe roll cutter suited to the respective material or a fine-toothed metal saw.



IMPORTANT!

When cutting stainless steel pipes the cutting speed must be low enough that the stainless steel is not sensitised as a result of heating. In addition, the saw blade or cutting wheel may not have been previously used on unalloyed ferrous materials.

2. Carefully deburr the pipe ends, internally and externally, using a suitable deburring tool (e.g. pipe deburring tool). Carefully remove any saw filings and deburring residues. The pipe end should be clean, have no sharp edges, with a resulting small smooth chamfer applied as a result of the deburring process. Clean pipe ends with suitable abrasive wool pad.



3. Mark the insertion depth with a felt-tip marker and template on the pipe or male plain end of the press fitting, e.g bend. The marking must be clear and waterproof.



4. Check that the factory inserted sealing ring in the fitting is
   - correctly seated in the sealing ring groove
   - free of dirt particles
   - has no visible damage



5 Then push the end of the pipe or the male plain end of the press fitting, in the fitting sleeve, until the stop point is reached, while turning it slightly and applying slight pressure. The outer edge of the fitting must correspond to the marking provided on the section of the pipe or the male plain end of the press fitting.



6 Select the press jaw according to the fitting size and ensure a clean, low-friction profile surface of the press jaw. Insert the press jaw in the appropriate pressing machine by opening the locking bolt and then closing it completely.

.



7 Place the pressing tool on the press connection to be produced, by opening the press jaw and placing it on the SANHA® press fitting, at right angles to the pipe, in such a way that the bead of the fitting engages in the groove of the press jaw. Then check whether the outer edge of the fitting corresponds with the marking.



8a Press the start button of the pressing machine to start the pressing process. While starting the pressing process, press and hold the start button for approx. 3 seconds. The pressing process will run automatically and cannot be stopped prematurely. This ensures a permanent seal, smooth profile and force-tight connection.



8b Once the press process is complete the press tool can be removed from the press joint by opening the press jaw. In case of a hazard, the press process can be interrupted by pressing the emergency-stop button*.



*** After resetting the emergency-stop situation the fitting must be repressed or a new one used.**

3.2.2 Dimension d = 42 mm to 88.9 mm (Making the press connection with press collars and intermediate adapters)

Press collars are used for the dimensions d = 42 mm to d = 88.9 mm. Installation is as described for steps 1 to 5 inclusive in Section 3.2.1 'Dimension d = 12 mm to 35 mm (making the press joint using press jaws)'. Then, for dimensions d = 42 mm to d = 88.9 mm, continue with steps 9 to 13.

9 Select the press collar according to the fitting size and ensure a clean, smooth surface of the press sling. For this purpose the marking lines on the sliding segments and the press sling collets must form one line. If this is not the case, loosen the sliding segments. Then place this press sling around the SANHA® press fitting in such a way that the bead of the fitting engages in the groove of the press sling. The press slings d = 64 mm to d = 88,9 mm are provided with a centering plate which always points in the direction of the pipe section to be pressed or the male plain end of the fitting. The press sling must be tight against the fitting.

.





10 Select the intermediate adapter according to the size. When using electronically controlled pressing machines, insert the intermediate jaw ZB 303 (SANHA® catalogue no. 6931.4 for d = 42 mm to d = 54 mm) in the pressing machine by opening the locking bolt and then closing it completely.



11 Turn the press collar into the appropriate position for applying the pressing tool. Open the pressing tool by pushing down the lever of the intermediate adapter and apply it on the press collar in such a way that the claws of the intermediate adapter grip around the bolts of the press collar. Then check whether the outer edge of the fitting corresponds with the marking.



12a Press and hold the start button of the press tool for approximately three seconds to start the pressing process. The press process will run automatically and should not be interrupted. This ensures a permanent seal, smooth profile and force-tight connection. After completing the pressing process, the pressing tool can be removed from the press collar by opening the intermediate adapter.



12b After completing the pressing process, the pressing tool can be removed from the press collar by opening the intermediate adapter. In case of danger, the pressing process can be stopped by pressing the emergency stop button*.

*** After resetting the emergency-stop situation the fitting must be repressed or a new one used.**



13 Remove the press collar from the press joint by pulling apart the two moveable press collar segments.



3.2.3 Dimension d = 108 mm
(Making the press connection using press collars and intermediate adapters)

For size d = 108 mm, a press collar and two different intermediate jaws are used.
For 108 mm Copper of nominal thickness 1.5 mm, a "Copper Only" sling, SANHA part no 16934, MUST be used.

14 Ensure clean, low-friction profile surfaces of the press collar, d = 108 mm. For this purpose the marking lines on the sliding segments and the press collar collets must form one line. If this is not the case, loosen the sliding segments. Then place this press collar around the SANHA® press fitting in such a way that the bead of the fitting engages in the groove of the press collar and the centering plate must always point in the direction of the pipe section or male plain end to be pressed. Close the press collar. For this purpose, push the closing bracket into the plug-in bolt and align the locking lever in a line with the closing bracket so that the lock engages. The press collar must be tight against the fitting.





15 Select the intermediate adapter to suit the dimension. For electronic press machines, place the intermediate adapter ZB321 (or ZB203 for non-electronically controlled press tools) in the press machine by opening and then closing the retaining bolt, once the adapter has been inserted into the tool.



16 Turn the press collar into the appropriate position for applying the pressing tool. Open the pressing tool by pushing down the lever of the intermediate adapter and apply it on the press collar in such a way that the claws of the intermediate adapter grip around the bolts of the press collar. Then check whether the outer edge of the fitting corresponds with the marking.



17 Press and hold the start button of the press tool for approximately three seconds to start the pressing process. The press process will run automatically and should not be interrupted. Once this process is complete the tool can be removed from the collar by opening the intermediate adapter. **Steps 9–13 are then performed using intermediate adapter ZB322, to completely close the collar.** In the event of a tool malfunction, the press process can be interrupted by pressing the emergency stop button*.



*** After resetting the emergency-stop situation the fitting must be repressed or a new one used.**

18 The press joint is now complete and the press collar can be removed from it by removing the locking lug and simultaneously moving the closing lever. To do this, lightly push out the locking pin from the opposite side.



The press collar can only be removed from the press joint if both intermediate jaws (ZB 321 and ZB 322) were used.

3.3 Pipe joints using the 3fit®-Press system fittings

3.3.1 Dimensions up to 32 mm

1 Cut the MultiFit®-Flex, MultiFit®-PEX and MultiFit®-PE-RT plastic composite pipe to length perpendicular to the central axis using pipe scissors or a suitable pipe cutter.



2 Select the deburring and calibration tool suited to the pipe dimension, push it completely into the pipe and carefully rotate clockwise. By doing this, the end of the pipe is calibrated and chamfered simultaneously. Remove any filings from the end of the pipe after completing this step of the procedure.



3 Check that the end of the pipe is clean and properly deburred (visible by a circumferential 15° chamfer).

.

IMPORTANT!

The chamfer must cover the entire circumference as this prevents the O-rings being pushed out of the groove.



4 Push the correct fitting onto the pipe as far as the stop. Check the correct pipe position through the inspection hole in the press sleeve – if visible, the pipe has reached the correct stop position. Check the correct pipe position through the orifice in the press sleeve – **the pipe must have reached the fitting stop!** Fit the press jaw with the broad groove to the plastic ring on the fitting.



5 Switch on the press machine – the press process is only successfully completed when complete jaw closure is achieved.
Check the correct pipe position through the inspection hole in the press sleeve – if visible, the pipe has reached the correct stop position.



6 **Checking the press joint**
The minimum pipe insertion depth can be seen through the inspection hole on the sleeve. Two parallel circular press marks, with a raised ridge in the middle, can be seen around the whole of the press sleeve.



3.3.2 Dimensions of 40 mm, 50 mm and 63 mm

Only press collars with TH, F and U profiles may be used for dimensions 40 mm to 63 mm and H profiles for dimension 40 mmm. They are initially installed as described in Section 3.3.1 'Dimensions up to 32 mm', steps 1 - 3. Then, for dimensions 40 mm, 50 mm and 63 mm, continue with steps 7 to 11.

7 Select suitable press collar. Ensure that the marking lines on the sliding segments and the press collar collets form one line. If this is not the case, loosen the sliding segments.

.

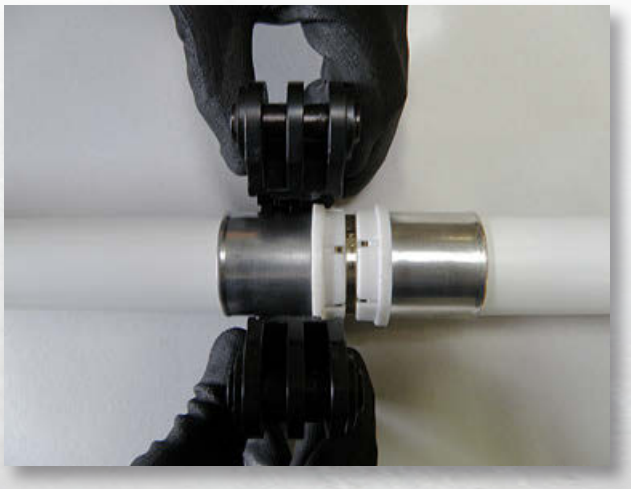

8 Select intermediate adapter to suit the dimension. On electronic press machines for dimensions from 40 mm to 63 mm and for conventional press machines, insert intermediate jaw ZB 203 (SANHA catalogue no. 6930) in the press machine and close the retaining bolt.



9 Open the intermediate adapter by pressing the jaw lever down and apply to the press collar such that the intermediate adapter claws engage around the press collar bolts. Press the start button for a minimum of three seconds to initiate the pressing process. This will run automatically and should not be interrupted. This ensures a permanent seal, a smooth profile and a force-tight connection. After completing the pressing process, the pressing tool can be removed from the press collar by opening the intermediate adapter. In case of danger, the pressing process can be halted by pressing the emergency stop button*.

*** After resetting the emergency-stop situation the fitting must be repressed or a new one used.**



10 Releasing the press collar by opening the locking lug. To do this, push out the locking pin from the opposite side.



11 **Checking the press joint**

The minimum pipe insertion depth can be seen through the inspection hole on the sleeve. Two parallel circular press marks, with a raised ridge in the middle, can be seen around the whole of the press sleeve.



3.4 Pipe joints using the 3fit®-Push push-fit fittings

1. Cut the MultiFit®-Flex, MultiFit®-PEX and MultiFit®-PE-RT plastic composite pipe to length perpendicular to the central axis using pipe scissors or a suitable pipe cutter.



2. By doing this, the end of the pipe is calibrated and chamfered simultaneously.
Remove any filings from the end of the pipe after completing this step of the procedure.



3. Check that the end of the pipe is clean and properly deburred (visible by a circumferential 15° chamfer).
The pipe should be round, and a minimum inside diameter (12 mm for DN 10, 16 mm for DN 15).

IMPORTANT!
The chamfer must cover the entire circumference as this prevents the O-rings being pushed out of the groove.



4. Push the correct fitting onto the pipe axially as far as the stop.

IMPORTANT!
Push the fitting on axially to ensure the first sealing ring is not pushed out of the groove.



5 Check that the pipe is visible in the push fitting's inspection window.



IMPORTANT!

The pipe must be inserted as far as the stop. This can be easily inspected in the integrated inspection window.

6 In the pressure test or when pressure is applied the pipe is generally pushed back out of the inspection window slightly. This is design-related; the safe connection between pipe and fitting is guaranteed by the innovative lock function.



4. Examples of testing protocols

Further testing protocols can be downloaded from our website at www.sanha.co.uk"

Commissioning log

SANHA
a perfect fit

Construction project: _____

_____

_____

_____

Client represented by: _____

Contractor/responsible party

Expert represented by: _____

☐ Sanitary facilities ☐ Gas system ☐ Air conditioning ☐ Heating system ☐ _____

Acceptance negotiations on _____

The following supplies and services were accepted:

_____

_____

_____

The following defects were established:

_____

_____

_____

The following final completion works are not significant and will be carried out immediately,
at the latest by _____, by the contractor:

_____

_____

_____

The following defects are not significant and will be removed immediately,
at the latest by _____, by the contractor:

_____

_____

_____

The supplies and services of _____ (contractor) are hereby accepted.

_____ _____

Place Date

_____ _____

Signature of client / representative Signature of contractor / representative

Pressure test log

for the drinking water system

SANHA
a perfect fit

Construction project: _____

_____

_____

_____

Client represented by: _____

Contractor/responsible party

Expert represented by: _____

Pressure testing with compressed air or inert gas

Test start (date/time) _____ Test end (date/time) _____

System pressure _____ bar

Ambient temperature _____ °C Temperature of test medium _____ °C

Test medium: ☐ oil-free compressed air ☐ nitrogen ☐ carbon dioxide (CO_2) ☐ _____

The drinking water system was inspected as ☐ an overall system or ☐ in _____ sections

All pipelines are closed with metal stoppers, caps or blanks or blind flanges.
Devices, pressure tanks or drinking water heaters must be disconnected from the pipes.
A visual inspection of all pipe connections for correct execution was carried out.

Leak test – preliminary test

Test pressure 150 mbar
Test time up to 100 litres pipeline volume at least 120 min.
The test time should be increased by 20 minutes for every additional 100 litres

Pipe volume _____ litres Test time _____ minutes

The temperature and steady-state condition is waited for; then the test time starts

☐ During the test time no fall in pressure was observed

Strength test with increased pressure – main test

Test pressure for drinking water pipeline with max. 3.0 bar at d ≤ 54 mm
Test pressure for drinking water pipeline with max. 1.0 bar at d > 54 mm
Test time at least 10 minutes

☐ During the test time no fall in pressure was observed

☐ The pipeline system is leak-proof

_____ _____

Place Date

_____ _____

Signature of client / representative Signature of contractor / representative

Technical product and installation information

SANHA
a perfect fit

With safety on your side

SANHA offers genuine advantages

As a family enterprise for over 50 years we have been observing a simple principle: every pipe and every fitting must give the customer added value in terms of safety and practical use at a fair price. This is our mission and, at the same time, the best recommendation from our satisfied customers.

As a specialist for pipeline systems we offer a unique breadth and depth of products for all of the usual connection techniques and applications from a one stop shop. Tried and tested installation techniques are as much a part of our program as practice-oriented innovations.

And that's why: SANHA. Always a perfect fit.

Your advantages:

1. **Full tool compatibility**
   Throughout the industry, SANHA system fittings are the only ones that can be pressed with all the usual original press profiles - with a full guarantee. You gain security by ruling out errors, thus saving time and money.
2. **Large product range**
   SANHA offers a wide material, product and dimension range, multiple connection methods, with significant expertise and experience – all from a one stop shop. SANHA, the pipeline specialist.
3. **Guaranteed safety**
   SANHA has all the important approvals, certifications and warranties, backed up by WRAS and BSI, ensuring you are always on the safe side.
4. **Nationwide technical service**
   SANHA is pleased to offer a wide range of services from installation training, technical seminars, design advice, specifications and on site support as and when required.

MH000/470_28_15
Subject to technical modifications and printing errors

SANHA UK Ltd. · 9 Eghams Court · Boston Drive · Bourne End · Buckinghamshire · SL8 5YS
Tel: 01628 819245 · Fax: 01628 525953 · email: uk@sanha.com
www.sanha.co.uk