Edificio Genebre. Av. de Joan Carles I, 46-48
08908 L'Hospitalet de Llobregat. Barcelona (Spain)
genebre@genebre.es - www.genebre.es

INSTALLATION, OPERATION & MAINTENANCE MANUAL



GE

Electric quarter turn Actuator
Single Phase

Ref. GENEBRE: 5803 – 5803L

Edificio Genebre. Av. de Joan Carles I, 46-48
08908 L'Hospitalet de Llobregat. Barcelona (Spain)
genebre@genebre.es - www.genebre.es

INSTRUCTIONS FOR INSTALLATION, OPERATION & MAINTENANCE MANUAL

1. Product Description 3

2. Technical Features & Data 3

3. Safety Instructions 3

4. Transport and Storage 4

5. Pre – Installation Inspection 4

6. Actuator Mounting 5

7. Electrical Connections 5

8. Preliminary Test and Settings 8

8.1. Local Visual Position Indicator 8
8.2. Emergency Manual Override Facility..... 8
8.3. External LED status light 10
8.4. Adjusting of the cams 10

9. Maintenance 12

9.1. Lubrication 12
9.2. Cleaning 12

10. Trouble Shooting 12

10.1. Actuator does not respond 12

1. Product Description

Genebre, S.A. offers a comprehensive range of electrical actuators such fraction of a turn (turn 90 degrees) and different types of voltages

GE electric Actuators are designed to automation of industrial valves of quarter turn with 0 – 90º range of operation.

Actuator torques range from 20 Nm to 300 Nm.

2. Technical Features & Data

Enclosure Rated	IP65 according to EN 60529
Enclosure	Polyamide A6
Power Supply	Serie "L" 12 a 48 AC / DC Serie "H" 80 a 240 AC / DC 50 / 60 Hz
Duty Cycle (ON-OFF)	75%
Limit Switches	4 SPDT micro
Stall Protection	Automatic Temperatura Control – Electronic Torque Limiter
Travel Angle	90º ± 5º (opcion 180º - 270º)
Local visual position indicator	Continuous position indicator
Visual control of operation (Only in J3 Type)	External LED status light
Manual Override	Include in actuator
Space Heater	4 W
Connectors	DIN 43650 ISO 4400 & C192
Ambient Temperature	-20ºC / +70ºC

3. Safety Instructions

The scope of this manual is to enable a competent user to install, operate, adjust and inspect a GE quarter turn electric actuator. These instructions must be observed, otherwise a safe operation of the actuator is no longer warranted.



As electric device, during electrical operation certain parts inevitably carry lethal voltages and currents (ELECTRICAL RISKS). Work on the electrical system or equipment must only be carried out by a skilled electrician himself or by specially instructed personnel, in accordance with the applicable electrical engineering rules, health and safety Directives and any other national legislation applicable.



Under no circumstances should any modification or alteration be carried out on the actuator as this could very well invalidate the conditions which the device was designed.

4. Transport and Storage

- **GE** quarter turn electric actuators are packed in sturdy packing. During transport measures should be adopted in order to prevent impacts, hits.
- Actuators must be stored in a clean, cool and dry area.
- The unit shall be stored with the cover installed and the conduit openings sealed with PTFE tape.
- Storage must be off the floor, covered with a sealed dust protector.
  While commissioning, Genebre, S.A. recommend a visual inspection in order to detect any anomaly caused during the transport, handling or during the storage.

5. Pre-Installation Inspection

- Verify the actuators nameplate to insure correct model number, torque, operating speed, options and special components, voltage and enclosure type before installation or use.
- It is important to verify that the output torque of the actuator is appropriate for the torque requirements of the valve and that the actuator duty cycle is appropriate for the intended application.
- If there is any discrepancy, please contact with your local distributor, or Genebre, S.A., to solve that discrepancy. Once the electric actuator has been set up, Genebre, S.A. decline any responsibility related to discrepancies

6. Actuator Mounting

- **Do not lift the actuator by the hand wheel. Do not attach to the hand wheel ropes or hooks to lift by hoist.**
- The actuator may be mounted in any position-
- The GE quarter turn electric actuator Series are supplied with a female drive output ISO5211. Bolt patterns are provided for actuator mounting.
- It is mandatory that the actuator be firmly secured to a sturdy mounting bracket or directly mounted to the valve's ISO mounting pad. High tensile bolts or studs with spring locking washers must be used.
- The valve output shaft must be inline with the actuator output drive to avoid side-loading the shaft. To avoid any backlash no flexibility in the mounting bracket or mounting should be allowed.
- Reserve the space for maintenance routines and tasks.

7. Electrical Connections

Safety instructions on chapter 3 must be observed. Work on electrical system or equipment must only be carried out by skilled electrician.
Wiring diagram is enclosed outside the quarter turn electric actuator.
Observe the max. allowable current/voltage values of electric devices.

- Standard factory units are anti-clockwise to open.

- Make sure that power supply voltage is in accordance with the data on the actuator nameplate.

- The supplied electrical connectors used to connect to the actuator are DIN plugs. Ensure the diameter of cable to be used conforms to the maximum and minimum requirements of the DIN plugs to maintain water tightness.

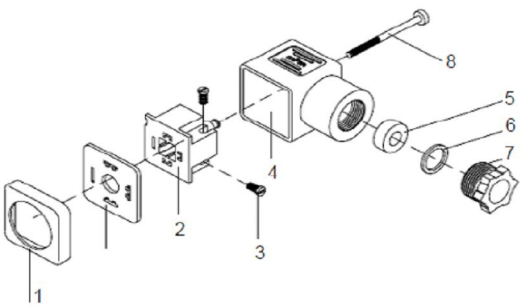

1- Gasket
2- Terminal strip
3- Cable fixing screws
4- Housing
5- Grommet
6- Washer
7- Gland - nut
8- Fixing screw

- Diameter of cable:

Model	Small Connector		Big Connector	
	Min. Diameter	Max. Diameter	Min. Diameter	Max. Diameter
GE-0 / GE-15	5 mm	6 mm	8 mm	10.5 mm
GE-2 / GE-2+	---------	---------	8 mm	10.5 mm

- External Electric Wiring:

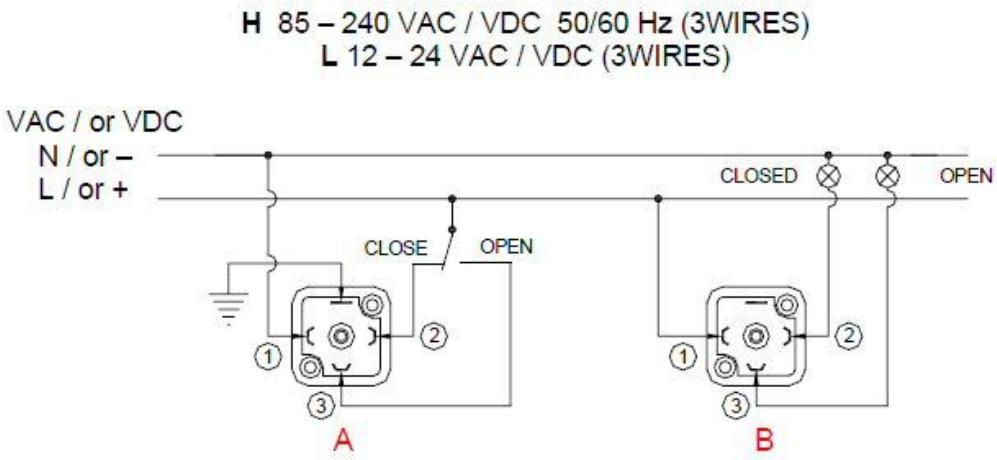

Conector A (Color Gris) / A Plug (Grey Color) = Alimentación Eléctrica / Power Supply

A: VAC 3 cables / VAC 3 wires

PIN 1 = Neutro / Neutral + PIN 2 = Fase / Phase = Cierra / Close

PIN 1 = Neutro / Neutral + PIN 3 = Fase / Phase = Abre / Open

A: VDC 3 cables / VDC 3 wires

PIN 1 = (-) Negativo / Negative + PIN 2 = (+) Positivo / Positive = Cierra / Close

PIN 1 = (-) Negativo / Negative + PIN 3 = (+) Positivo / Positive = Abre / Open

Conector B (Color Negro) / B Plug (Black Color) = Contactos Auxiliares / Volt free Contacts

B: PIN 1 / PIN 2 = Cerrado / Closed
PIN 1 / PIN 3 = Abierto / Open

H 85 – 240 VDC (2WIRES)
L 12 – 24VDC (2WIRES)

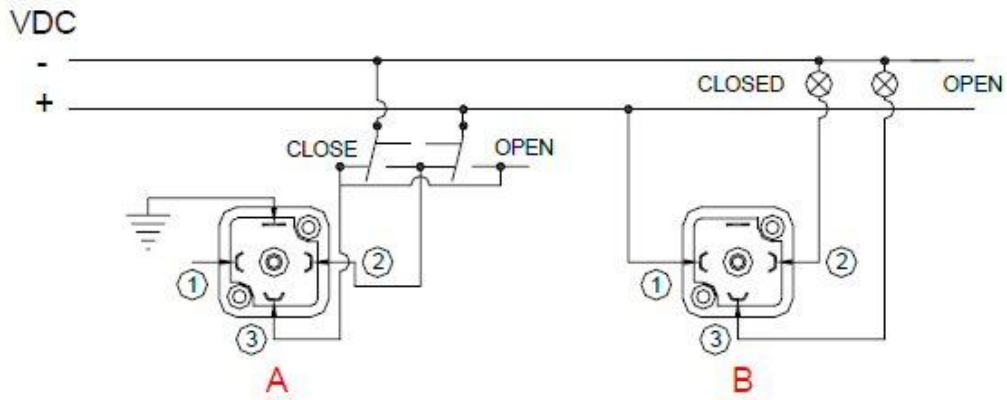

Conector A (Color Gris) / A Plug (Grey Color) = Alimentación Eléctrica / Power Supply

A: VDC 2 cables / VDC 2 wires

PIN 2 = (+) Positivo / Positive + PIN 3 = (-) Negativo / Negative = Cierra / Close

PIN 2 = (-) Negativo / Negative + PIN 3 = (+) Positivo / Positive = Abre / Open

Conector B (Color Negro) / B Plug (Black Color) = Contactos Auxiliares / Volt free Contacts

B: PIN 1 / PIN 2 = Cerrado / Closed
PIN 1 / PIN 3 = Abierto / Open

- Ensure that the square rubber seal is in place when fixing each DIN plug to the actuator. Failure to do so could allow water ingress and damage caused by this installation error will invalidate any warranty.
- The DIN plugs are fixed to their respective bases on the actuator housing with a screw. Do not overtighten the screw when assembling.

8. Preliminary Test and Settings

- It is recommended that only qualified electrical engineers be allowed to connect or adjust these actuators. Always ensure that the power supply is disconnected prior to removing the top cover by disconnecting the DIN power input plug.
- It is strongly recommended that each actuator has its own independent fuse system to protect it from the electrical influence of other electrical devices.

8.1 Local Visual Position Indicator

- All GE actuators are supplied with a local visual position indicador comprising of a black base with a yellow insert that shows both the position and direction of rotation (Figure 1).
- When the yellow insert indicate] ● [the actuator is OPEN and if this indication is] ⬬ [the actuator is CLOSED.

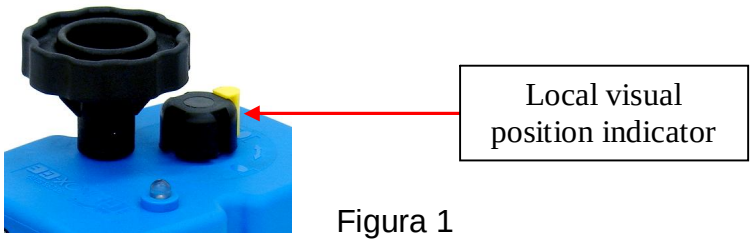

Figura 1

- Opening = counter clockwise.
  Closing = Clockwise

8.2 Emergency Manual Override Facility

- All GE actuators are supplied with a declutchable manual override to allow operation should power not be available.
- The GE actuator has 2 operating modes, automatic and manual, the required mode is selected using a lever on the lower half of the actuator housing. The 2 positions are marked:

AUTO = Automatic operation
MAN = Manual operation

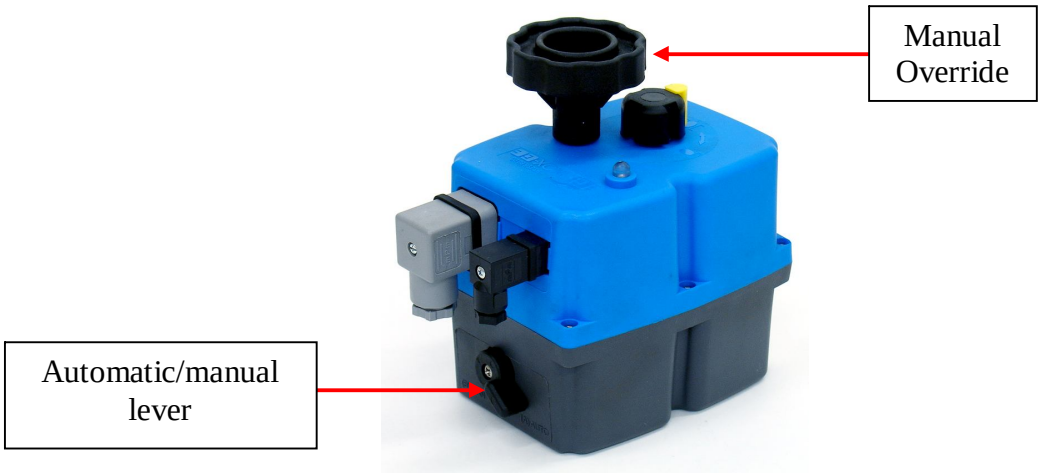

WARRING: Do not remove the selector lever securing cross head screw as this will allow its internal mechanism to become loose and will cause irreparable damage to the actuator's gearbox. Removing this screw will invalidate the warranty.

When "MAN" function is selected:

- The electronic system cuts the power to the motor after a few seconds.
- The motor to output shaft drive is disconnected.
- The desired position can be achieved by using the manual override lever or handwheel.
- There are two ways to re-activate the motor after being isolated whilst in "MAN" position:

    1. With the actuator in 'MAN' function, using the handwheel/ handlever, turn the actuator to one of the endpositions (open or closed). If the endposition switch is activated the motor runs. Now switch the manual override from "MAN" to "AUTO" . and the actuator is ready to operate automatically again.
    2. Switch from "MAN" mode to "AUTO". Desactivate the supply voltage for a few seconds which resets the actuator and it is then ready to operate automatically again.

8.3 External LED Status Light (Only in J3 Type)

The LED status light provides visual communication between the actuator and the user The current operational status of the actuator is shown by either solidly lit, or different flashing sequences of the LED light:

- Time: 200 msec x each digit of the configuration.
- Configuration: digit 1 = LED on, digit 0 = LED off.
- The configuration is a repetitive sequence of 4 columns of 4 digits.

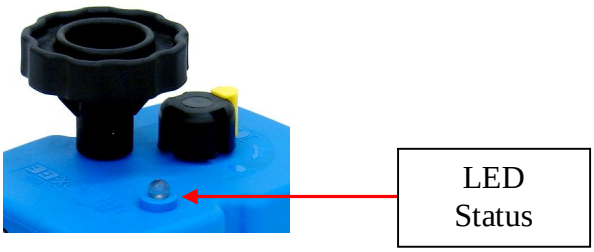

LED Status		
Estado	Tiempo / *Time*	Configuración / *Configuration*
Actuator without power	100 %	0000 0000 0000 0000
Actuator with power	100 %	1111 1111 1111 1111
Actuator with torque limiter activated	200 mSeg.	1010 1010 1010 1010
Manual mode off	200 mSeg.	1110 1111 1111 1110

8.4 Adjusting of the cams

The standard actuators are always adjusted at 0º (closed) and 90º (open).

If is necessary modify or adjusting the cams, the secuence is:

- The cams are fixed to the main shaft by means of seeger ring.
- Tolling: One allen key 2mm.
- To move the cams to introduce the allen key in the slot of the cam and move it to open or to close (see both options on the enclosed photos).



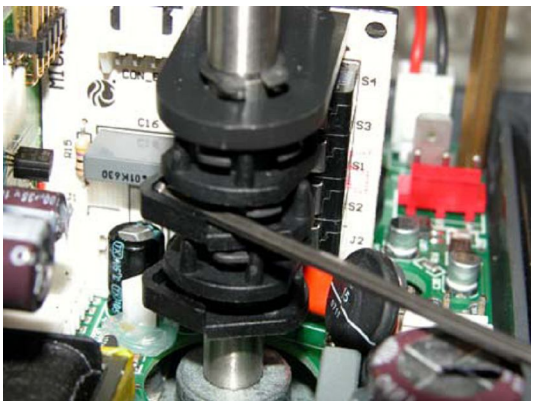

Cams position:

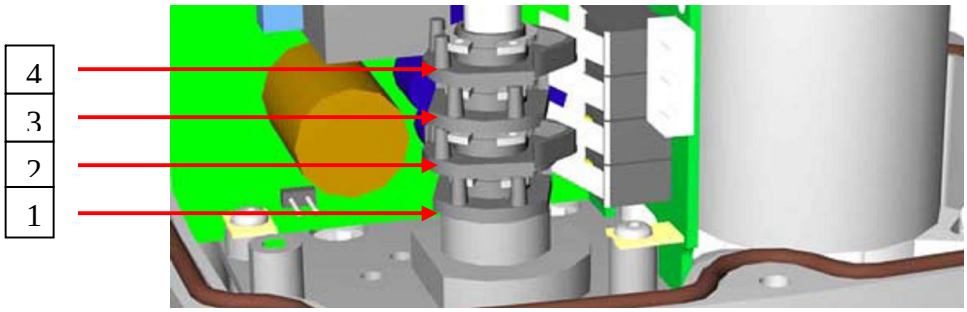

1 = Cam1 adjusting of the closed position.
2 = Cam 2 adjusting of the open position.
3 = Cam 3 adjusting of the closed position confirmation.
4 = Cam 2 adjusting of the open position confirmation.

To avoid the problem that the position confirmation does not work, adjust the confirmation cams (3 & 4) aprox. 3 degrees before of the stop motor.

To adjust the closed position to less than 0º:

To move the cams 1 and 3 to anti-clockwise direction. The cam 3 must press the lever of the microswitch a little before that the cam 1.

To adjust the closed position to more than 0º:

To move the cams 1 and 3 to clockwise direction. The cam 3 must press the lever of the microswitch a little before that the cam 1.

To adjust the open position to more than 0º:

To move the cams 2 and 4 to clockwise direction. The cam 4 must press the lever of the microswitch a little before that the cam 2.

To adjust the open position to less than 0º:

To move the cams 2 and 4 to anti-clockwise direction. The cam 4 must press the lever of the microswitch a little before that the cam 2.

9. Maintenance

These actuators are free maintenance, but when conditions are more severe, more frequent inspections may be advisable.

- Ensure valve actuator alignment.
- Insure wiring is insulated, connected and terminated properly.
- Insure all screws are present and tight.
- Insure conduit connections are installed properly and are dry.
- Verify declutch mechanism.
- Visually inspect during open/close cycle.

9.1 Lubrication

GE Series electric actuator is a totally enclosed unit with a permanently lubricated gear train. Once installed lubrication should not be required.

9.2 Cleanning

For external cleanning only use neutral detergent.

10. Trouble Shooting

The following instructions are offered for the most common difficulties encounter during installation and start-up.

10.1 Actuator does not respond

- Verify the line voltage (Power supply) to the actuator.
- Check that the voltage matches the rating on the actuator nameplate.